KLEIN®

Instrucciones / Instructions / Anweisungen / Instructions

ROLL GLASS® 40
EXPERT AUTOPORTANTE

KLEIN EUROPE
Edificio KLEIN
Polígono Industrial Can Cuyás, N-150 Km.1
08110 Montcada i Reixac (Barcelona-Spain)
Tel.: (+34) 935 751 010
Fax: (+34) 935 760 109
+INFO
www.klein-europe.com

TÜVRheinland® CERT ISO 9001

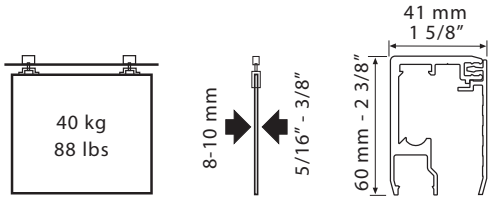

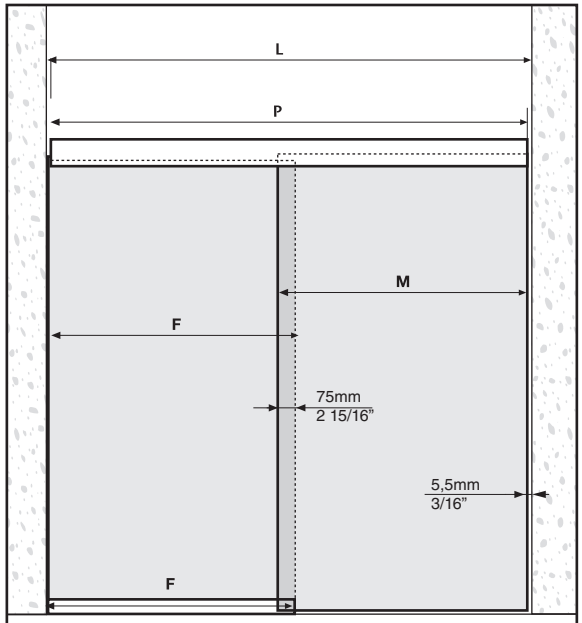

P=L-5 mm (máx.2m)
P=L-3/16" (máx.6,6 3/4")

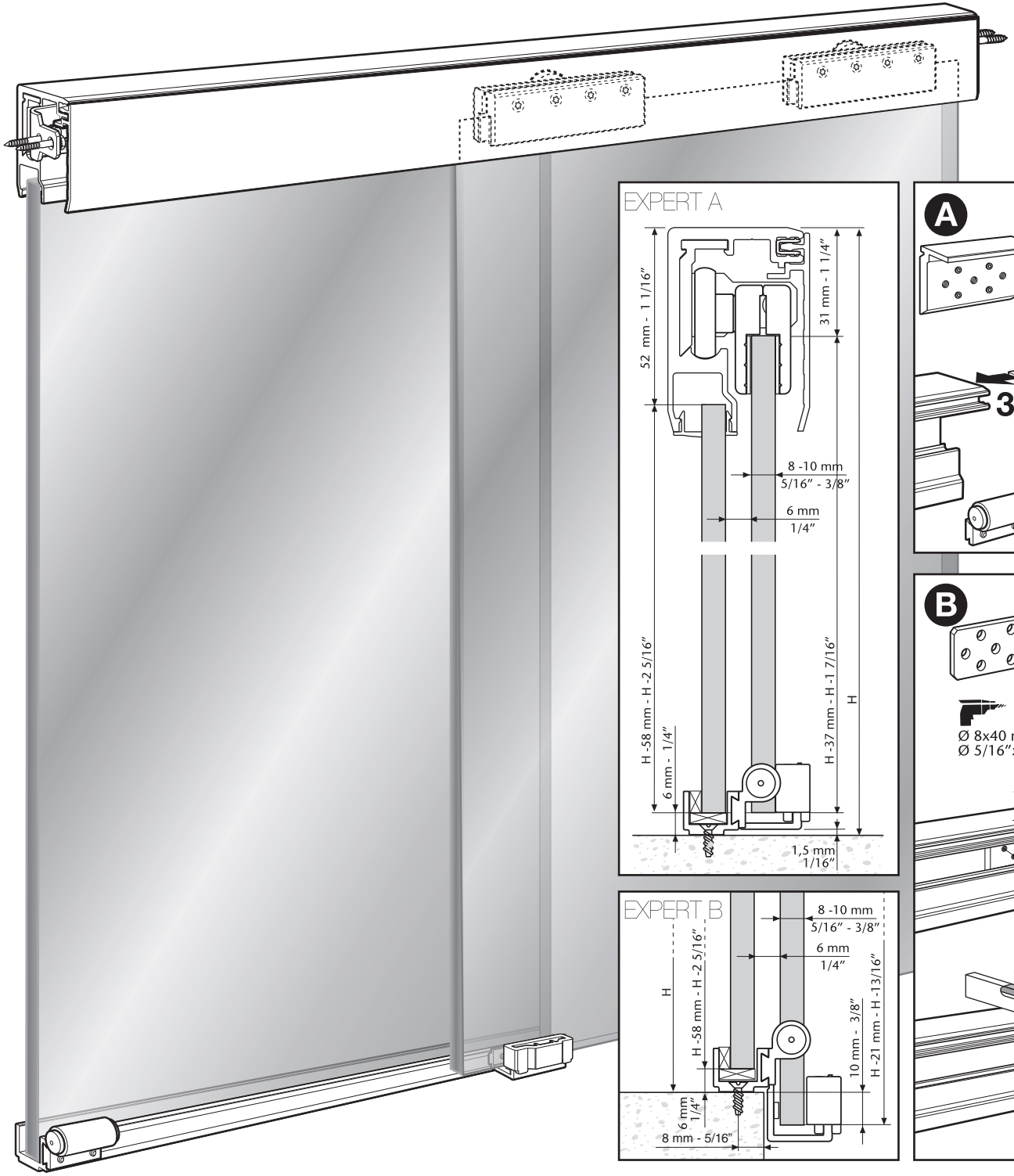

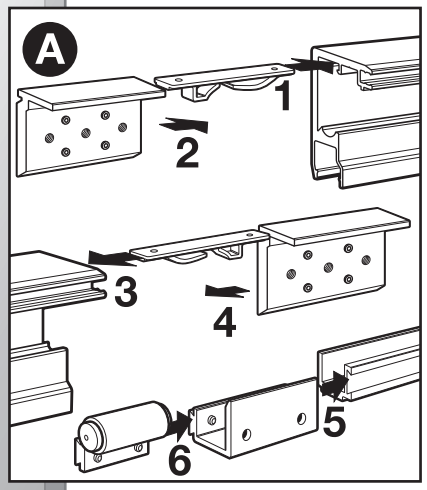

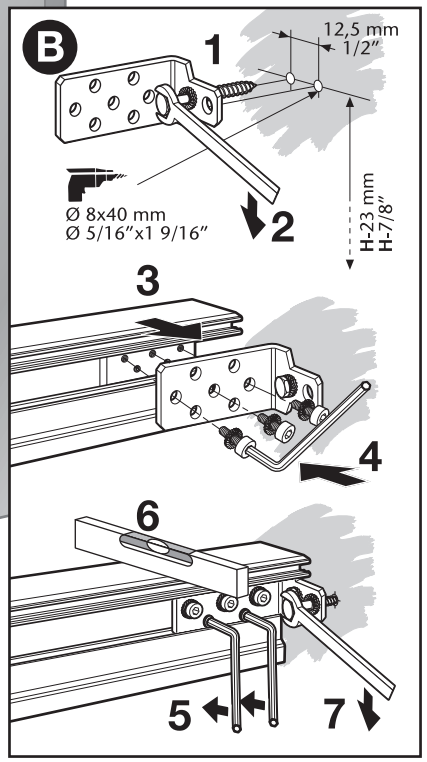

411-2625 05-11 PK-18

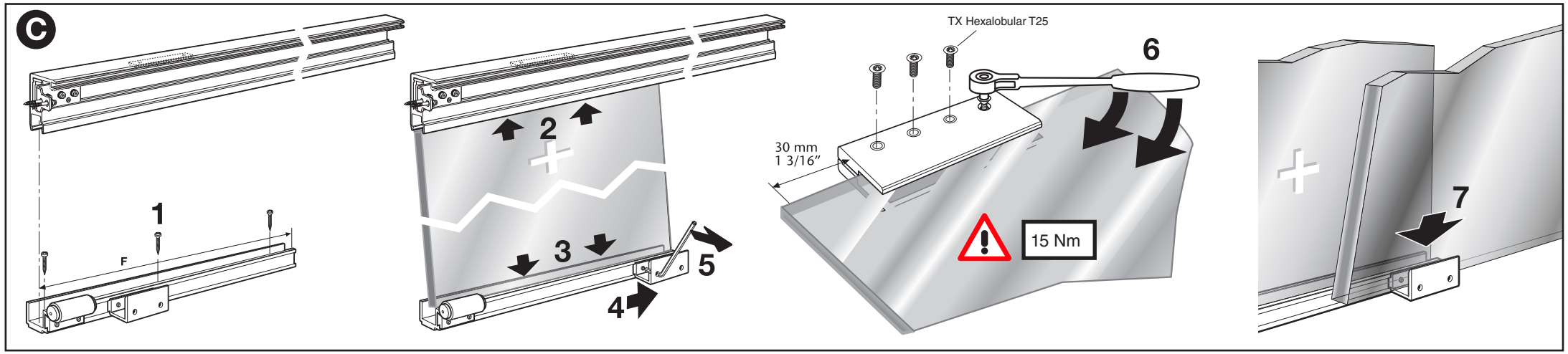
C
1
F
2
3
4
5
TX Hexalobular T25
6
30 mm
1 3/16"
15 Nm
7

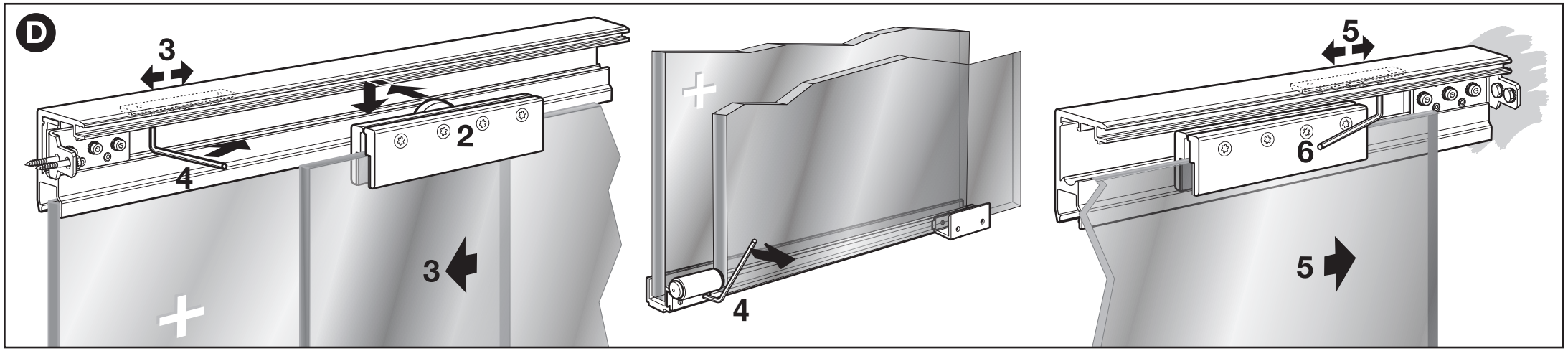
D
3
4
2
3
4
5
6
5

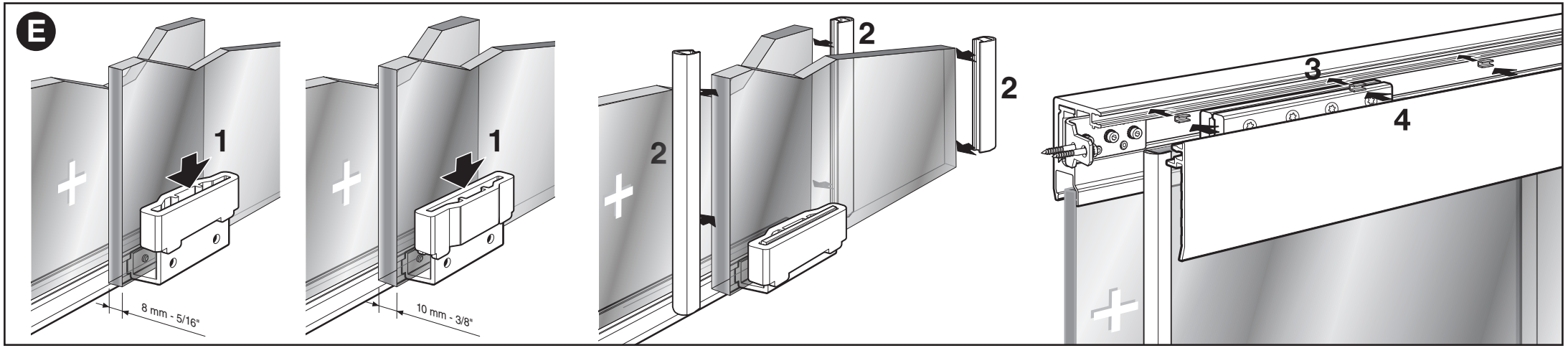
E
1
8 mm - 5/16"
1
10 mm - 3/8"
2
2
2
3
4